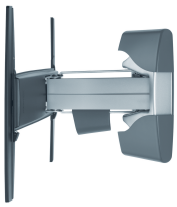

LCD/Plasma wall mount Motion M
EFW 8225

- Screen size (Min. - Max.): 26 – 37 " / 66 – 94 cm
- Max. weight: 30 kg / 66 lbs
- Turn: 90 °
- Min. distance to the wall (mm): 76 mm
- VESA mounting holes: 75x75mm up to 500x350mm
- Guarantee: Lifelong
- Available colours: Black-Dolphingrey

Vogel's Motion mount EFW 8225 is suitable for flat TV's from 26 up to 37 inch. It has a maximum turning range of 90 degrees (45 degrees both ways) and features the patented Cable Inlay System (CIS®) to conceals all of your cables.

Innovating the Audio/Video Experience

LCD/Plasma wall mount Motion
EFW 8225

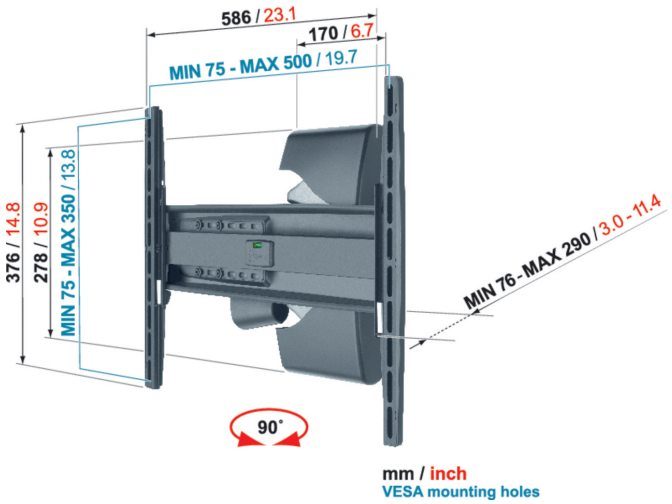

If you want the ultimate movie theatre experience, sit right in front of your TV instead of having to watch at an angle. The Vogel's 8000 Motion series lets you move your TV for the best view. It turns 45 degrees side-to-side so you always get the best view. Thanks to the patented Smart Movement Mechanism (SMM®) you can move even the biggest flat screen with the touch of a fingertip.

Installing is very easy. There's even a level in the mount to make sure it hangs perfectly straight. The smart AutoLock® holds your screen securely in place so you don't have to worry about the safety of your valuable TV.

Create your own entertainment centre and combine this wall support with the 8000-series Column system and Audio/DVD multi support.

Features

- Autolock®
- Integrated spirit level
- VESA mounting holes: 75x75mm up to 500x350mm.
- Motion - 90º turning range.
- Additional - Screen Protection System (SPS®)
- OPTIONAL -Smart Movement Mechanism (SMM®) - fingertip movement.
- Cable Inlay System (CIS®) - all cables out of sight.

Logistic information

- Packaging size: 308x516x94 mm
- Max. weight: 4 kg / 9 lbs
- EAN Code: 8712285315480

Version: 05/04/2011
Subject to printing errors, technical and price amendments